Go Series G330

Go Series G330, a 100% wire-free mobile HD security camera, operates on 4G-LTE and 3G networks. An ideal video monitoring solution with no cords, no wiring hassles, when in areas with limited or no WiFi access, no electrical power source!

1. Specs

1	6 IR LEDs
2	Status LED
3	Daylight Sensor
4	Lens
5	Built-in Mic
6	Built-in PIR Motion Sensor
7	USB-C Port
8	Speaker

1	Micro SD Card Slot
2	SIM Card Slot
3	Reset Hole
4	Battery Status LED

Status Light

Note:

If the camera connects the network successfully, there will be no status LED light up during idle mode.

Status Light	Camera Status
Red LED solid light up then starts to flash.	Camera cannot recognize the SIM card or there is PIN code of the SIM card.
Blue LED flashes slowly, then goes off.	Camera cannot register the mobile carrier network.
Red LED is solid on, then Blue LED flashes quickly and then goes off.	Data call failed or requires to input the APN.
Blue LED is solid on for 2 seconds and then goes off, repeating 5 times.	Network connection failed.
Red LED solid light up then blue LED starts to flash and solid light up, finally goes off.	Network connection succeed.

2. Setup and Install

Set up the Camera

What's in the Box

Note: The package content may vary and update with different version and platforms, please take the below information only for a reference. And the actual package content are subject to the latest information on the product selling page.
Go Series G330

Go Series G330 *1

USB-C Cable*1

Quick Start Guide*1

Mount*1

Camouflage Skin *1

Surveillance Sticker*1

Pack of Screws*1

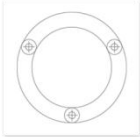

Mounting Template *1

Reset Needle*1

Activate the SIM Card for the Camera

- Choose a Nano SIM card that supports WCDMA and FDD LTE.
- Activate the card on your smartphone or with your network carrier before inserting it into the camera.

Notes:

- Some SIM cards have a PIN code, please use your smartphone to disable the PIN first.
- Do not insert the IoT or M2M SIM card into your smartphone.

Install the SIM Card

1. Remove the back cover by rotating counterclockwise and take the battery out of the camera.
2. Peel off the insulation film on the battery.
3. Insert the SIM card into the slot.

4. Insert the battery into the camera and tighten the back cover to power on the camera.

5. A red LED will be on and solid for a couple of seconds, then it will go out.

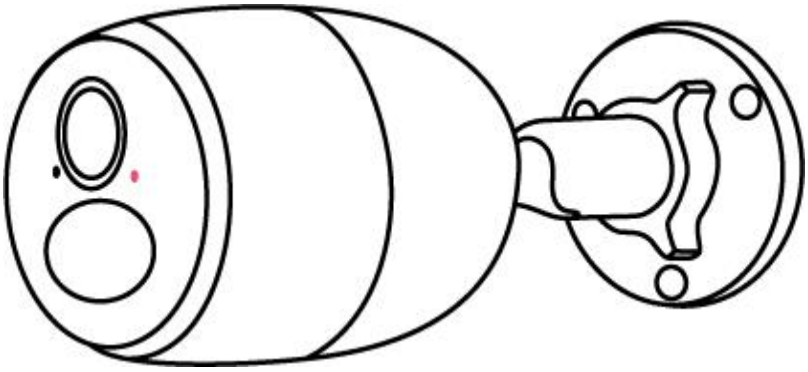

6. “Network connection succeeded”.
A blue LED will flash for a few seconds and then go solid before going out, which means the camera has been successfully connected to the network.

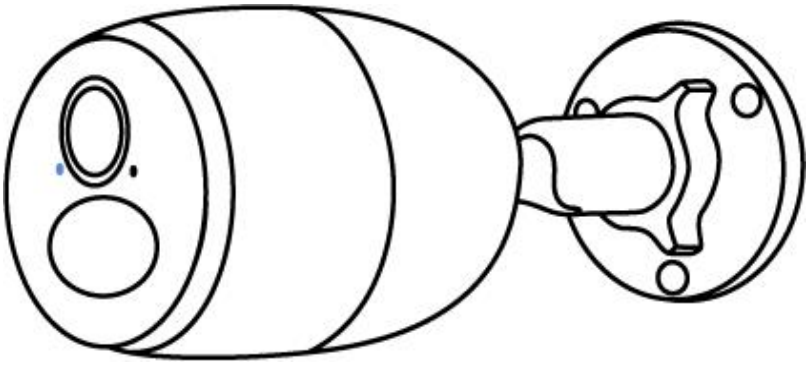

Note:
You may also run into the following situations:

No.	Voice Prompts	Camera Status	Solutions
1	“SIM card cannot be recognized”	Camera cannot recognize this SIM card.	1. Check if the SIM card is facing the reverse direction. 2. Check if the SIM card is not fully inserted and insert it again.
2	“The SIM card is locked with a PIN. Please disable it”	Your SIM card has a PIN.	Put the SIM card into your mobile phone and disable the PIN.
3	“Not registered on network. Please activate your SIM card and check the signal strength”	Camera fails to register to the operator network.	1. Check whether your card is activated or not. If not, please call your operator to activate the SIM card. 2.The signal is weak at the current position. Please move the camera to a location with better signal. 3.Check if you are using the correct version of the
4	“Network connection failed”	Camera fails to connect to the server.	The camera will be in standby mode and reconnect later.
5	“Data call failed. Please confirm your cellular data plan is available or import the APN settings”	The SIM card has run out of data or APN settings are not correct.	1. Please check whether the data plan for the SIM card is still available. 2. Import the correct APN settings to the camera.

Set up the Camera on the App

Please follow the steps below to do initial setup for the battery-powered cameras via Reolink App.

Step 1. Tap the icon in the top right corner to add the camera.

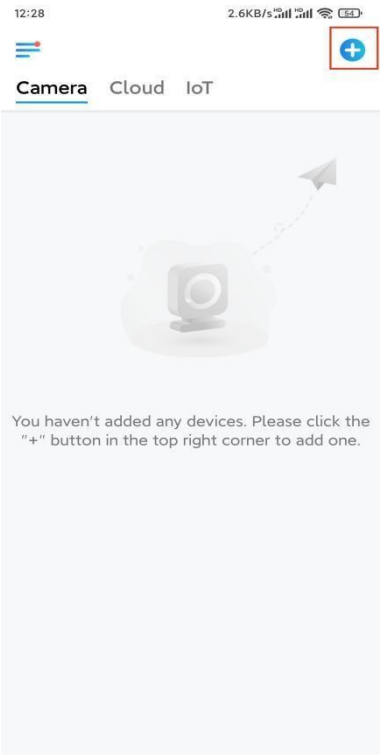

Step 2. Scan the QR code on the back of the camera. If the phone doesn't respond, please tap **Input UID/IP** below the scan window, and then enter the 16-digit UID number under the QR code of the camera.

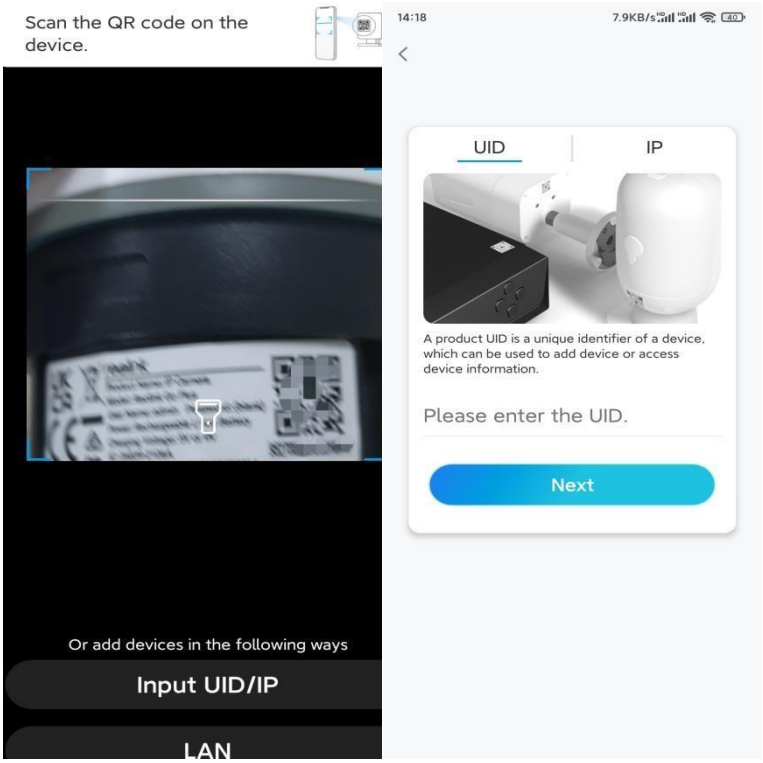

Step 3. Create the login password and name your camera. Then tap **Next**.

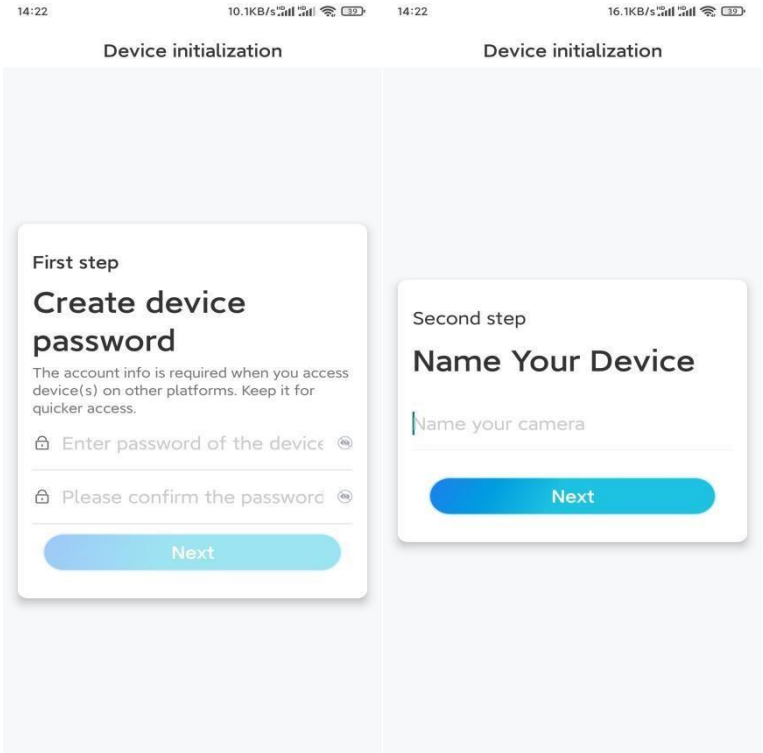

Step 4. Read the note and then tap **Finish** to complete the initialization of your camera.

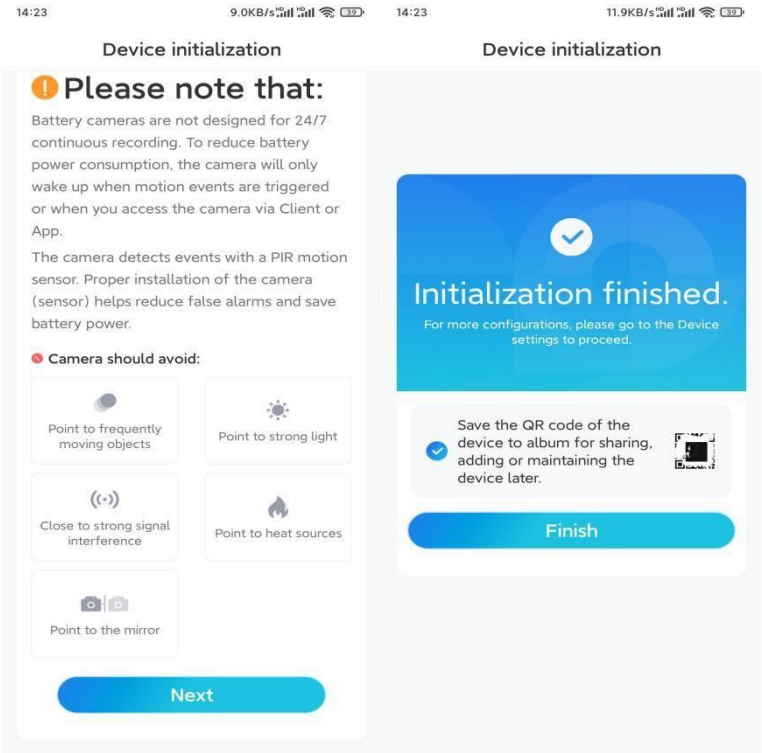

Now the initialization is finished and you can move it to the position you want. Here is an article to choose a good position for the camera.

Install the Camera

We offer you guides on different scenes in which the camera could be installed. Check out them respectively.

Mount the Camera to Wall

1. Drill holes in accordance with the mounting hole template and screw the security mount to the wall. If you are mounting the camera on any hard surface, insert plastic anchors into the holes first.

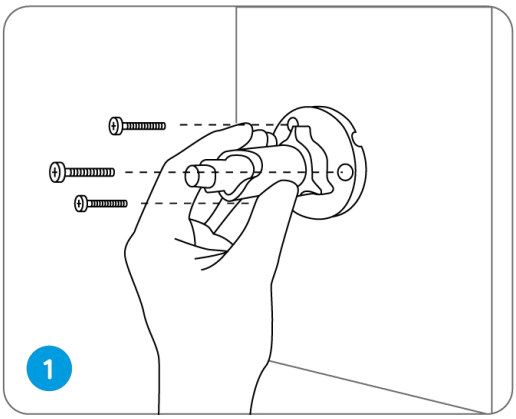

2. Install the camera on the security mount.

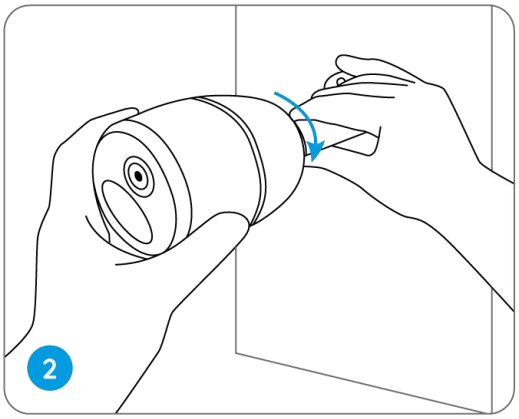

3. To get the best field of view, loosen the adjustment knob on security mount and turn the camera.

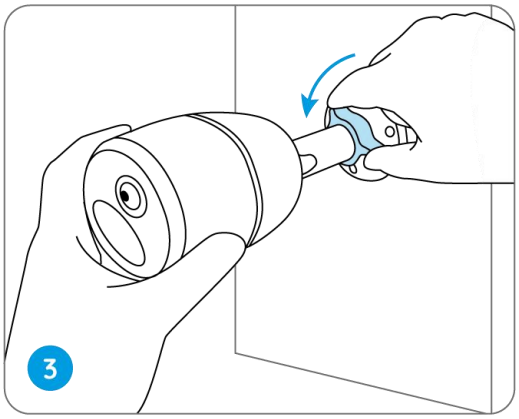

4. Stiffen the adjustment knob to lock the camera.

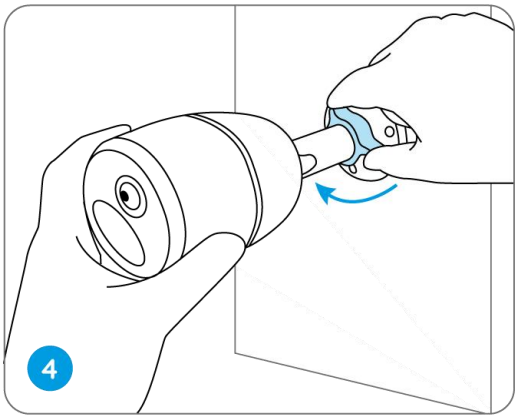

Attach the Camera to a Tree

1. Thread the provided strap to the mounting plate.

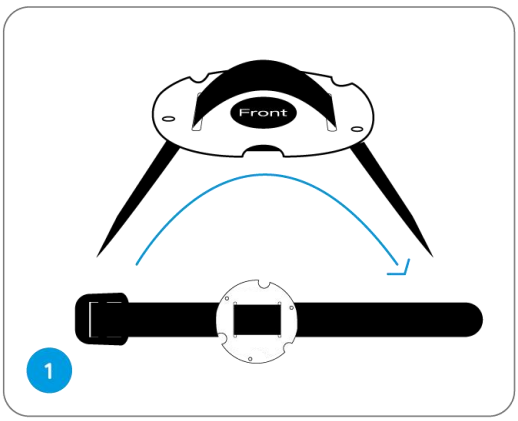

2. Attach the plate to the security mount with the smaller screws.

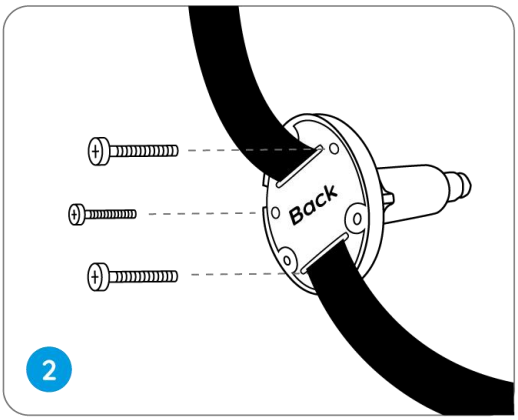

3. Fasten the security mount to a tree.

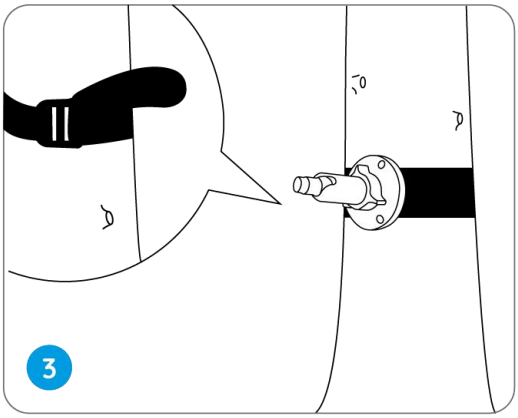
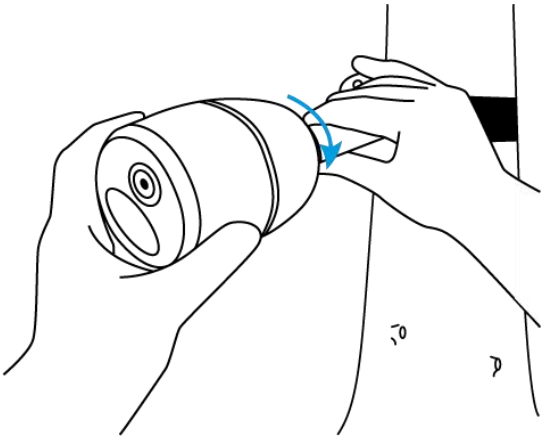
4. Install the camera and adjust the camera angles as instructed in **Step 2 & 4** in the previous installation guide.